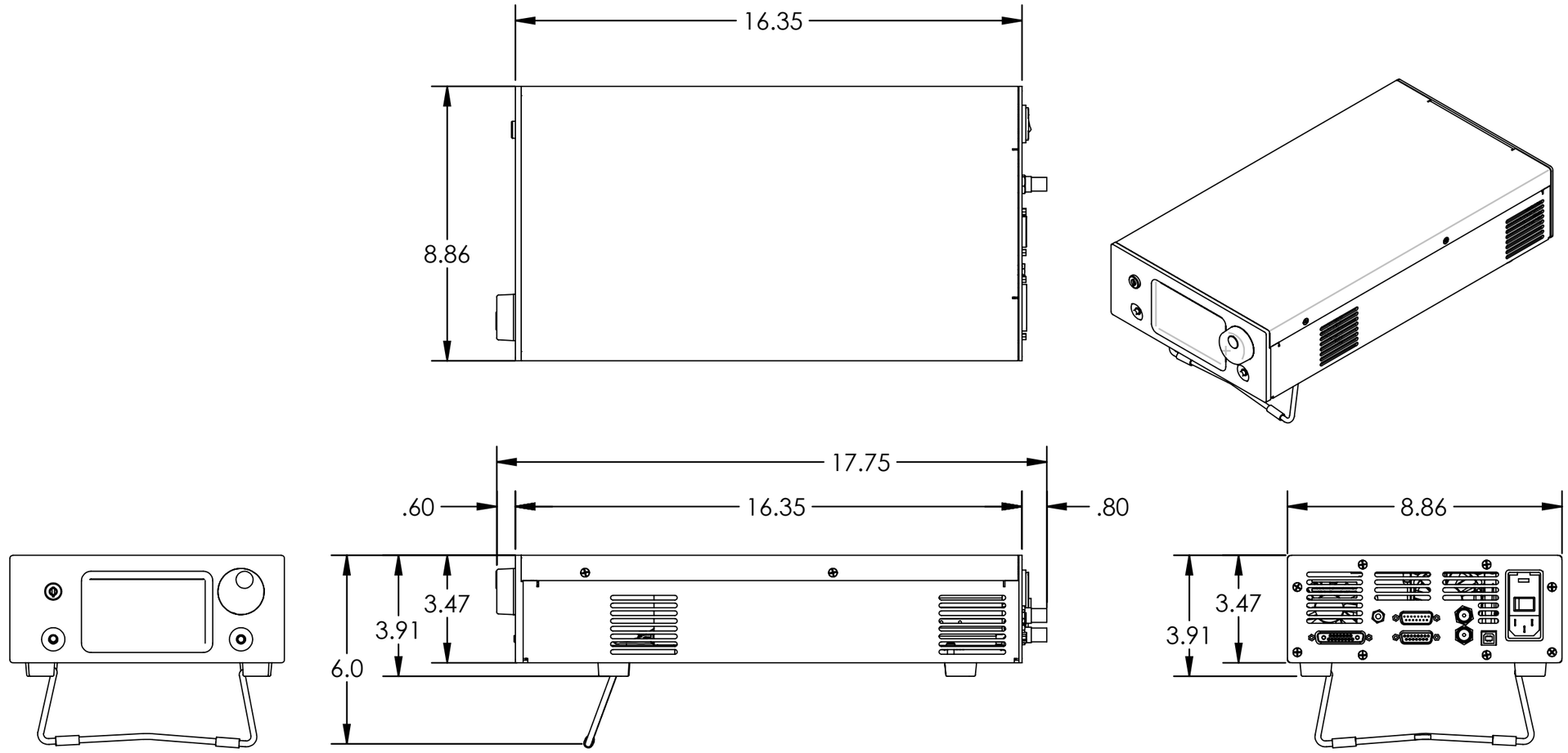
16.35
8.86
17.75
.60
16.35
.80
3.47
3.91
6.0
8.86
3.47
3.91